ADC Lab Logbook

Part 3 | Section 1: Characterising a BJT

Section 1: Characterising a BJT

Aim

To characterise the BC547B bipolar junction transistor (BJT) under several fixed base currents, in order to understand its current-amplifying behaviour and to observe non-ideal effects including the Early effect.

Before the Lab

BJT Current Equations

For an NPN BJT, the collector current in the ideal (Shockley) model is:

$$I_C\ (ideal) \approx I_S \cdot e^{(V_{BE}/V_T)}$$

In practice, as V_{CE} increases in the active region, the reverse-biased collector-base junction widens. Since the base width is inversely proportional to this depletion width, the collector current increases slightly with V_{CE}. This is the Early effect, modelled as:

$$I_C\ (non\text{-}ideal) = I_S \cdot e^{(V_{BE}/V_T)} \cdot (1 + V_{CE}/V_A)$$

where V_A is the Early voltage. Note: for a PNP BJT, V_{BE} is replaced by V_{EB} and V_{CE} by V_{EC}.

From the BC547B datasheet, the maximum DC collector current is I_C (max) = 100 mA.

Estimation of Early Voltage from Datasheet

Extrapolating two I_C–V_{CE} curves from Figure 1 of the datasheet to the V_{CE} -axis gives x-intercepts of approximately −92 V and −87.3 V, suggesting a nominal Early voltage in the range 50–120 V.

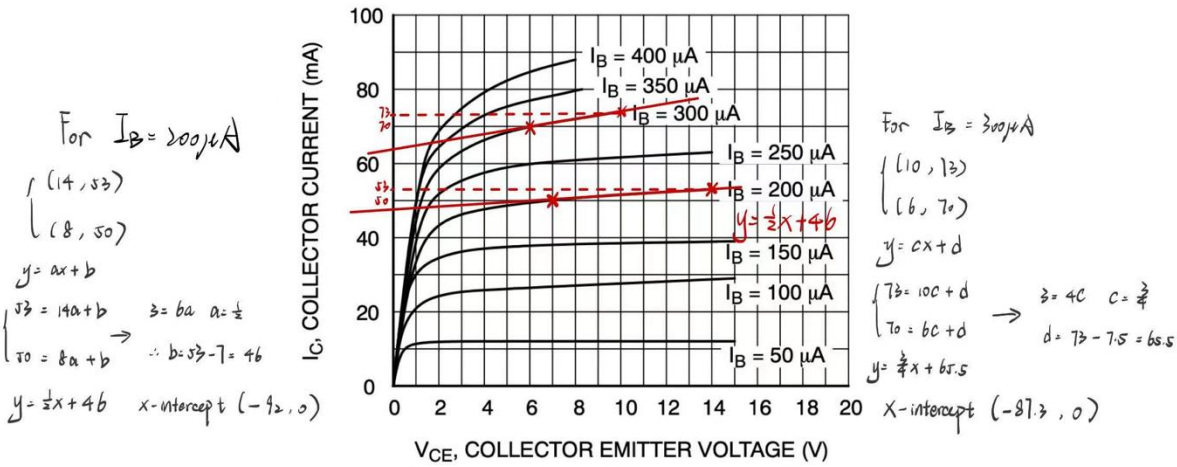

Figure 1. Static Characteristic

Current Gain h_{FE} (β) at I_C = 2 mA, V_{CE} = 5 V, 25°C

From the datasheet, the DC current gain β at these conditions spans a wide range of 110 to 800, reflecting transistor-to-transistor variation within the BC547B family.

Characterising the BJT

Circuit Description

The characterisation circuit consists of a 100 Ω collector resistor R_C in series with the collector, a 33 kΩ resistor R_{B2} in series with the base, and a 3.3 kΩ resistor R_{B1} from base to ground. V_{in} (0–10 V) biases the collector, and V_{in} (0–5 V) sets the base current through R_{A2} . The collector current is calculated from V^c via Ohm's law: $I_C = (V_{CC} - V_C) / R_C$.

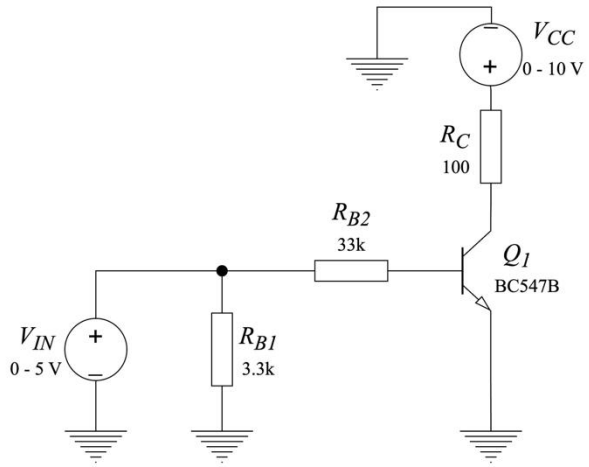

Three base currents were selected: I_B = 20 µA, 50 µA, and 100 µA. For each, V_{in} was adjusted so that the voltage across R_{B2} equalled $I_B \times R_{B2}$, confirmed by multimeter.

I_A = 20 µA (V^{IN} = 1.37 V, estimated and confirmed by multimeter)

All results are based on experimentally measured data, not on numerical or circuit simulations.

Vc (V)	Ic (µA)	Vce (V)	Vcc (V)
0.004	40	0.01	0
0.326	3260	0.158	0.5
0.519	5190	0.456	1
0.548	5480	0.931	1.5
0.553	5530	1.43	2
0.558	5580	2.42	3
0.564	5640	3.42	4
0.57	5700	4.41	5
0.577	5770	5.41	6
0.582	5820	6.41	7
0.586	5860	7.37	8
0.594	5940	8.37	9
0.598	5980	9.36	10

Linear fit (active region, $V_{CE} > 2$ V): I_C (µA) = $58.05 \cdot V_{CE} + 5443.95$. The x-intercept gives an Early voltage of $\mathbf{V_A \approx 93.8}$ **V**.

The graph is in the next page.

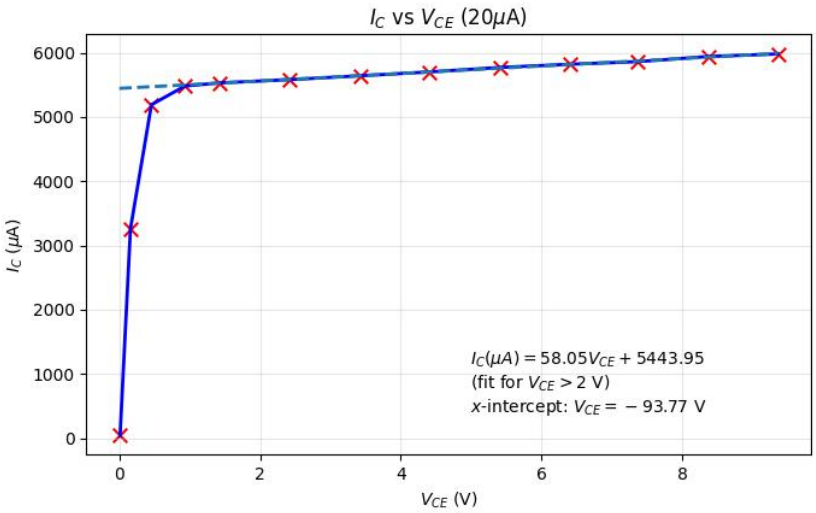

I_B = 50 μA (V_{in} = 2.39 V, estimated 2.35 V)

All results are based on experimentally measured data, not on numerical or circuit simulations.

Vc (V)	Ic (μA)	Vce (V)	Vcc (V)
0.005	50	0.002	0
0.37	3700	0.113	0.5
0.793	7930	0.189	1
1.018	10180	0.456	1.5
1.159	11590	0.817	2
1.325	13250	1.647	3
1.356	13560	2.62	4
1.381	13810	3.59	5
1.403	14030	4.57	6
1.424	14240	5.56	7
1.452	14520	6.52	8
1.478	14780	7.49	9
1.498	14980	9.85	10

Linear fit ($V_{CE} > 4$ V): I_C (μA) = 184.65·V_{CE} + 13254.77. Early voltage: $\mathbf{V_A \approx 71.8}$ **V**.

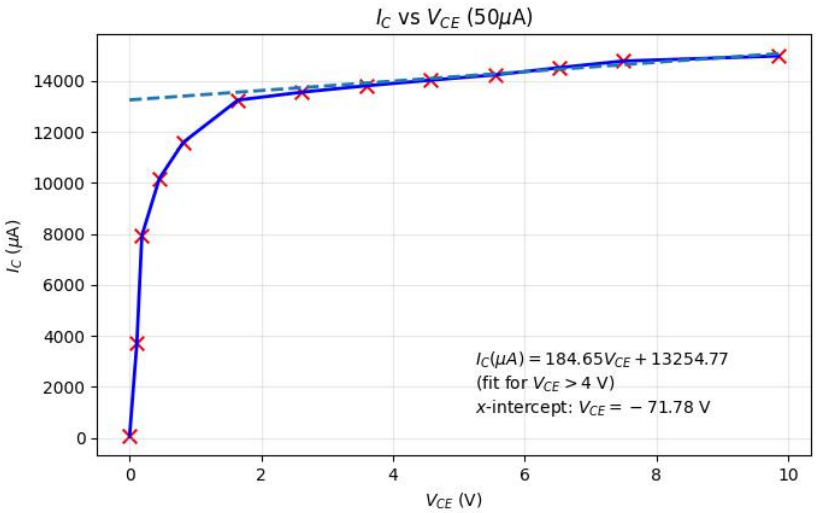

I_B = 100 μA (V_{in} = 4.02 V, estimated 4.00 V)

All results are based on experimentally measured data, not on numerical or circuit simulations.

Vc (V)	Ic (μA)	Vce (V)	Vcc (V)
0.002	20	0.002	0
0.401	4010	0.08	0.5
0.852	8520	0.13	1
1.293	12930	0.189	1.5
1.581	15810	0.401	2
1.922	19220	1.044	3
2.22	22200	1.752	4
2.46	24600	2.52	5
2.63	26300	3.35	6
2.74	27400	4.27	7
2.81	28100	5.23	8
2.88	28800	6.07	9
2.95	29500	6.53	9.5
2.97	29700	7.03	10

Linear fit (V_{CE} > 5 V): I_{CE} (μA) = 936.63·V_{CE} + 23203.86. Early voltage: **V_A ≈ 24.8 V**.

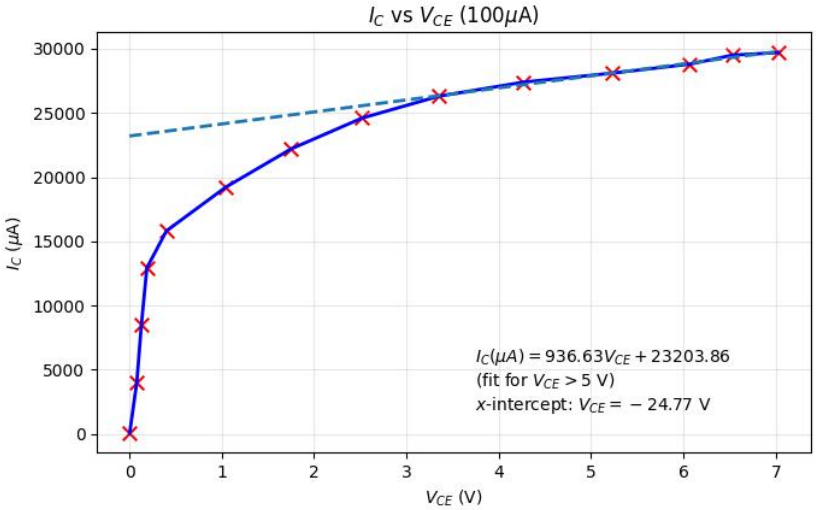

Behaviour in Each Region

In saturation (V_{CE} < V_{in}), the BJT acts as a resistor and I_C is proportional to the voltage drop across R_C:

$$I_C \approx (V_{CC} - V_{CE}) / R_C$$

In the active region (V_{CE} > V_{in}), the emitter–base junction is forward-biased and the base–collector junction is reverse-biased. Ideally I_C is independent of V_{CE}, but due to the Early effect the slope is non-zero, with gradient equal to I_C/V_A (i.e. 1 + V_{CE}/V_A in the modified Shockley model).

Comparison with Datasheet Early Voltage

The first two measured Early voltages (94 V and 72 V) fall within or near the datasheet range of 50–120 V. The third value (25 V at I_B = 100 μA) is substantially lower than the expected range.

Discussion
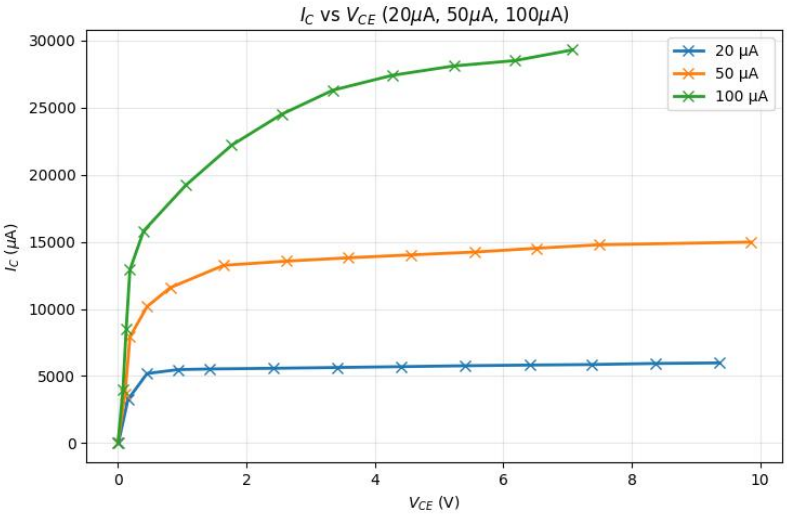
The significant variation in Early voltage across the three bias conditions is likely attributable to self-heating. At higher base currents, the power dissipated in the transistor is greater, raising the junction temperature during the measurement sweep. Elevated temperature increases the reverse saturation current I_S and the thermal voltage V_T, both of which cause I^c to increase above its isothermal value. This additional temperature-induced rise in I^c steepens the active-region slope, producing an artificially low apparent Early voltage. The effect is most pronounced at I_B = 100 μA, where self-heating is most significant.